EXTREMAL PROPERTIES FOR DISSECTIONS OF CONVEX 3-POLYTOPES

JESÚS A. DE LOERA*, FRANCISCO SANTOS†, AND FUMIHIKO TAKEUCHI‡

Abstract. A dissection of a convex d-polytope is a partition of the polytope into d-simplices whose vertices are among the vertices of the polytope. Triangulations are dissections that have the additional property that the set of all its simplices forms a simplicial complex. The size of a dissection is the number of d-simplices it contains. This paper compares triangulations of maximal size with dissections of maximal size. We also exhibit lower and upper bounds for the size of dissections of a 3-polytope and analyze extremal size triangulations for specific non-simplicial polytopes: prisms, antiprisms, Archimedean solids, and combinatorial d-cubes.

Key words. dissection; triangulation; mismatched region; lattice polytope; combinatorial d-cube; prism; antiprism; Archimedean solid

AMS subject classifications. 52B45, 52B05, 52B70, 52B55.

1. Introduction. Let $\mathcal{A}$ be a point configuration in $\boldsymbol{R}^d$ with its convex hull $conv(\mathcal{A})$ having dimension d. A set of d-simplices with vertices in $\mathcal{A}$ is a *dissection* of $\mathcal{A}$ if no pair of simplices has an interior point in common and their union equals $conv(\mathcal{A})$. A dissection is a *triangulation* of $\mathcal{A}$ if in addition any pair of simplices intersects at a common face (possibly empty). The *size* of a dissection is the number of d-simplices it contains. We say that a dissection is *mismatching* when it is not a triangulation (i.e. it is not a simplicial complex). In this paper we study mismatching dissections of maximal possible size for a convex polytope and compare them with maximal triangulations. This investigation is related to the study of Hilbert bases and the hierarchy of covering properties for polyhedral cones which is relevant in Algebraic Geometry and Integer Programming (see [5, 10, 24]). Maximal dissections are relevant also in the enumeration of interior lattice points and its applications (see [2, 15] and references there).

It was first shown by Lagarias and Ziegler that dissections of maximal size turn out to be, in general, larger than maximal triangulations, but their example uses interior points [16]. Similar investigations were undertaken for mismatching minimal dissections and minimal triangulations of convex polytopes [4]. In this paper we augment previous results by showing that it is possible to have *simultaneously*, in the same 3-polytope, that the size of a mismatching minimal (maximal) dissection is smaller (larger) than any minimal (maximal) triangulation. In addition, we show that the gap between the size of a mismatching maximal dissection and a maximal triangulation can grow linearly on the number of vertices and that this occurs already for a family of simplicial convex 3-polytopes. A natural question is how different are the upper and lower bounds for the size of mismatching dissections versus those bounds known for triangulations (see [21]). We prove lower and upper bounds on their size with respect to the number of vertices for dimension three and exhibit examples showing that our technique of proof fails already in dimension four. Here is the first

*Dept. of Mathematics, Univ. of California-Davis (deloera@math.ucdavis.edu). The research of this author partially supported by NSF grant DMS-0073815.

†Depto. de Matemáticas, Estad. y Comput., Univ. de Cantabria (santos@matesco.unican.es). The research of this author was supported partially by grant PB97-0358 of the Spanish Dirección General de Investigación Científica y Técnica.

‡Dept. of Information Science, Univ. of Tokyo (fumi@is.s.u-tokyo.ac.jp).

summary of results:

THEOREM 1.1.

1. *There exists an infinite family of convex simplicial* 3*-polytopes with increasing number of vertices whose mismatching maximal dissections are larger than their maximal triangulations. This gap is linear in the number of vertices* (*Corollary 2.2*).
2. (a) *There exists a lattice* 3*-polytope with* 8 *vertices containing no other lattice point other than its vertices whose maximal dissection is larger than its maximal triangulations.*
   (b) *There exists a* 3*-polytope with* 8 *vertices for which, simultaneously, its minimal dissection is smaller than minimal triangulations and maximal dissection is larger than maximal triangulations.*

   (*Proposition 2.3*)
3. *If* D *is a mismatching dissection of a* 3*-polytope with* n *vertices, then the size of* D *is at least* $n-2$. *In addition, the size of* D *is bounded above by* $\binom{n-2}{2}$ (*Proposition 3.2*).

A consequence of our third point is that the result of [4], stating a linear gap between the size of minimal dissections and minimal triangulations, is best possible. The results are discussed in Sections 2 and 3.

The last section presents a study of maximal and minimal triangulations for combinatorial d-cubes, three-dimensional prisms and anti-prisms, as well as other Archimedean polytopes. The following theorem and table summarize the main results:

THEOREM 1.2.

1. *There is a constant* $c > 1$ *such that for every* $d \geq 3$ *the maximal triangulation among all possible combinatorial* d*-cubes has size at least* $c^d d!$ (*Proposition 4.1*).
2. *For a three-dimensional* m*-prism, in any of its possible coordinatizations, the size of a minimal triangulation is* $2m-5+\lceil \frac{m}{2} \rceil$. *For an* m*-antiprism, in any of its possible coordinatizations, the size of a minimal triangulation is* $3m-5$ (*Proposition 4.3*). *The size of a maximal triangulation of an* m*-prism depends on the coordinatization, and in certain natural cases it is* $(m^2+m-6)/2$ (*Proposition 4.4*).
3. *The following table specifies sizes of the minimal and maximal triangulations for some Platonic and Archimidean solids. These results were obtained via integer programming calculations using the approach described in [8]. All computations used the canonical symmetric coordinatizations for these polytopes [6]. The number of vertices is indicated in parenthesis* (*Remark 4.5*)*:*

P	$\lvert T_{min}(P)\rvert$	$\lvert T_{max}(P)\rvert$
Icosahedron (12)	15	20
Dodecahedron (20)	23	36
Cuboctahedron (12)	13	17
Icosidodecahedron (30)	45	?
Truncated Tetrahedron (12)	10	13
Truncated Octahedron (24)	27	?
Truncated Cube (24)	25	48
Small Rhombicuboctahedron (24)	35	?
Pentakis Dodecahedron (32)	54	?
Rhombododecahedron (14)	12	21

TABLE 1.1

Sizes of extremal triangulations of Platonic and Archimidean solids.

2. Maximal dissections of 3-polytopes. We introduce some important definitions and conventions: We denote by Q_m a convex m-gon with m an even positive integer. Let v_1v_2 and u_1u_2 be two edges parallel to Q_m, orthogonal to each other, on opposite sides of the plane containing Q_m, and such that the four segments v_iu_j intersect the interior of Q_m. We suppose that v_1v_2 and u_1u_2 are not parallel to any diagonal or edge of Q_m. The convex hull P_m of these points has $m+4$ vertices and it is a simplicial polytope. We will call north (respectively south) vertex of Q_m the one which maximizes (respectively minimizes) the scalar product with the vector $v_2 - v_1$. Similarly, we will call east (west) the vertex which maximizes (minimizes) the scalar product with $u_2 - u_1$. We denote these four vertices n, s, e and w, respectively. See Figure 2.1.

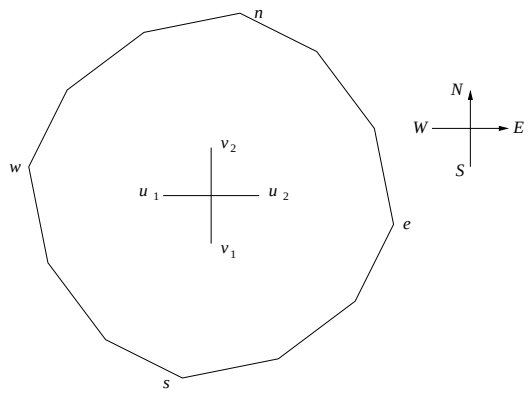

FIG. 2.1. *North, South, East, and West vertices.*

We say that a directed path of edges inside Q_m is *monotone in the direction* v_1v_2 (respectively u_1u_2) when the vertices of the path appear in the path following the same order given by the scalar product with $v_2 - v_1$ (respectively $u_2 - u_1$). An equivalent formulation is that any line orthogonal to v_1v_2 cuts the path in at most one point. We remark that by our choice of v_1v_2 and u_1u_2 all vertices of Q_m are ordered by the values of their scalar products with $v_2 - v_1$ and also with respect to $u_2 - u_1$. In the same way, a sequence of vertices of Q_m is *ordered in the direction* of v_1v_2 (respectively u_1u_2), if the order is the same as the one provided by using the values of the scalar products of the points with the vector $v_2 - v_1$ (respectively $u_2 - u_1$). Consider the two orderings induced by the directions of v_1v_2 and u_1u_2 on the set of vertices of Q_m. Let us call *horizontal* (respectively *vertical*) any edge joining two consecutive vertices in the direction of v_1v_2 (respectively of u_1u_2). As an example, if Q_m is regular then the vertical edges in Q_m form a zig-zag path as shown in Figure 2.2.

Our examples in this section will be based on the following observation and are inspired by a similar analysis of maximal dissections of dilated empty lattice tetrahedra in $\boldsymbol{R}^3$ by Lagarias and Ziegler [16]: Let R_m be the convex hull of the $m+2$ vertices consisting of the m-gon Q_m and v_1, v_2. R_m is exactly one half of the polytope P_m. Consider a triangulation T_0 of Q_m and a path Γ of edges of T_0 monotone with respect to the direction u_1u_2. Observe that Γ divides T_0 in two regions, which we will call the "north" and the "south". Then, the following three families of tetrahedra form a triangulation T of R_m: the edges of Γ joined to the edge v_1v_2; the southern triangles of T_0 joined to v_1; and the northern triangles of T_0 joined to v_2 (see Figure 2.3). Moreover, all the triangulations of R_m are obtained in this way: Any triangulation T

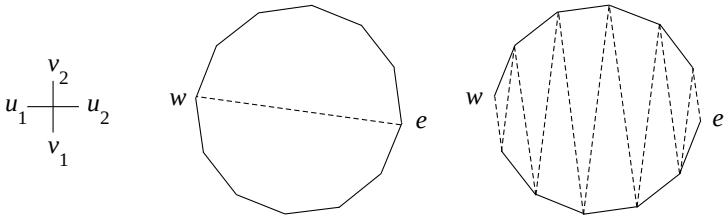

FIG. 2.2. *The minimal monotone path (middle) and the maximal monotone path made by the vertical edges (right) in the direction u_1u_2.*

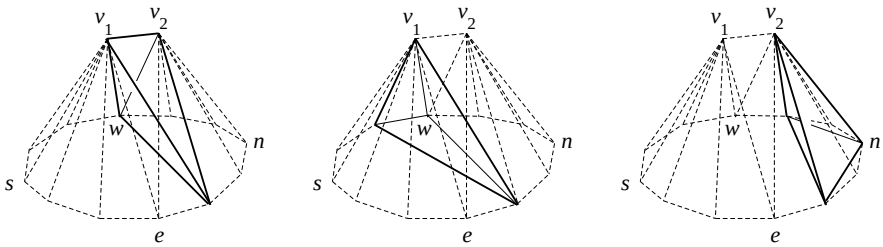

FIG. 2.3. *Three types of tetrahedra in R_m.*

of R_m induces a triangulation T_0 of Q_m. The link of v_1v_2 in T is a monotone path of edges contained in T_0 and it divides T_0 in two regions, joined respectively to v_1 and v_2.

Using the Cayley trick, one can also think of the triangulations of R_m as the fine mixed subdivisions of the Minkowski sum $Q_m + v_1v_2$ (see [13] and references within).

The size of a triangulation of R_m equals $m - 2 + |\Gamma|$, where $|\Gamma|$ is the number of edges in the path Γ. There is a unique minimal path in Q_m of length one (Figure 2.2, middle) and a unique maximal path of length $m - 1$ (Figure 2.2, right). Hence the minimal and maximal triangulations of R_m have, respectively, $m - 1$ and $2m - 3$ tetrahedra. The maximal triangulation is unique, but the minimal one is not: after choosing the diagonal in Γ the rest of the polygon Q_m can be triangulated in many ways. From the above discussion regarding R_m we see that we could independently triangulate each of the two halves of P_m with any number of tetrahedra from $m - 1$ to $2m - 3$. Hence, P_m has dissections of sizes going from $2m - 2$ to $4m - 6$. Among the triangulations of P_m, we will call *halving triangulations* those that triangulate the two halves of P_m. Equivalently, the halving triangulations are those which do not contain any of the four edges v_iu_j.

PROPOSITION 2.1. *Let P_m be as described above, with Q_m being a regular m-gon. No triangulation of P_m has more than $\frac{7m}{2} + 1$ tetrahedra. On the other hand, there are mismatching dissections of P_m with $4m - 6$ tetrahedra.*

Proof. Let T be a triangulation of P_m. It is an easy application of Euler's formulas for the 3-ball and 2-sphere that the number of tetrahedra in a triangulation of any 3-ball without interior vertices equals the number of vertices plus interior edges minus three (such formula appears for instance in [9]). Hence our task is to prove that T has at most $\frac{5m}{2}$ interior edges. For this, we classify the interior edges according to how many vertices of Q_m they are incident to. There are only four edges not incident to any vertex of Q_m (the edges v_iu_j, $i, j \in \{1, 2\}$). Moreover, T contains at most $m - 3$ edges incident to two vertices of Q_m (i.e. diagonals of Q_m), since in any family of

more than $m-3$ such edges there are pairs which cross each other. Thus, it suffices to prove that T contains at most $\frac{3m}{2}-1$ edges incident to just one vertex of Q_m, i.e. of the form v_ip or u_ip with $p \in Q_m$.

Let p be any vertex of Q_m. If p equals w or e then the edges pv_1 and pv_2 are both in the boundary of P_m; for any other p, exactly one of pv_1 and pv_2 is on the boundary and the other one is interior. Moreover, we claim that if pv_i is an interior edge in a triangulation T, then the triangle pv_1v_2 appears in T. This is so because there is a plane containing pv_i and having v_{3-i} as the unique vertex on one side. At the same time the link of pv_i is a cycle going around the edge. Hence, v_{3-i} must appear in the link of pv_i. It follows from the above claim that the number of interior edges of the form pv_i in T equals the number of vertices of Q_m other than w and e in the link of v_1v_2. In a similar way, the number of interior edges of the form pu_i in T equals the number of vertices of Q_m other than n and s in the link of u_1u_2. In other words, if we call $\Gamma_u = link_T(v_1v_2) \cap Q_m$ and $\Gamma_v = link_T(u_1u_2) \cap Q_m$ (the u, v in the index and of the vertices are reversed, because in this way Γ_u is monotone with respect to u_1u_2, and Γ_v with respect to v_1v_2), then the number of interior edges in T incident to exactly one vertex of Q_m equals $|vertices(\Gamma_v)| + |vertices(\Gamma_u)| - 4$. Our goal is to bound this number. As an example, Figure 2.4 shows the intersection of Q_m with a certain triangulation of P_m ($m = 12$). The link of v_1v_2 in this triangulation is the chain of vertices and edges $wabu_1nu_2ce$ (the star of v_1v_2 is marked in thick and grey in the figure). Γ_u consists of the chains wab and ce and the isolated vertex n. In turn, the link of u_1u_2 is the chain nv_1s and Γ_v consists of the isolated vertices n and s.

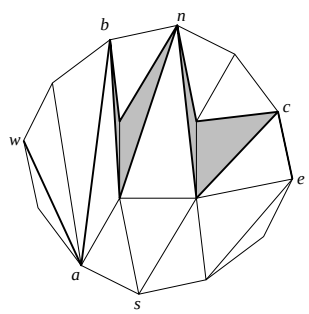

FIG. 2.4. *Illustration of the proof of Proposition 2.1.*

Observe that Γ_v has at most three connected components, because it is obtained by removing from $link_T(u_1u_2)$ (a path) the parts of it incident to v_1 and v_2, if any. Each component is monotone in the direction of v_1v_2 and the projections of any two components to a line parallel to v_1v_2 do not overlap. The sequence of vertices of Q_m ordered in the direction of v_1v_2, can have a pair of consecutive vertices contained in Γ_v only where there is a horizontal edge in Γ_v or in the at most two discontinuities of Γ_v. This is true because Q_m is a regular m-gon.

We denote n_{hor} the number of horizontal edges in Γ_v and n'_{hor} this number plus the number of discontinuities in Γ_v (hence $n'_{hor} \leq n_{hor} + 2$). Every non-horizontal edge of Γ_v produces a jump of at least two in the v_1v_2-ordering of the vertices of P_m, hence we have

$$|vertices(\Gamma_v)| - 1 - n'_{hor} \leq \frac{m-1-n'_{hor}}{2}.$$

Analogously, and with the obvious similar meaning for n_{vert} and n'_{vert},

$$|vertices(\Gamma_u)| - 1 - n'_{vert} \leq \frac{m - 1 - n'_{vert}}{2}.$$

Since $\Gamma_u \cup \Gamma_v$ can be completed to a triangulation of Q_m, and exactly four non-interior edges of Q_m are horizontal or vertical, we have $n_{hor} + n_{vert} \leq (m-3) + 4 = m + 1$, i.e. $n'_{hor} + n'_{vert} \leq m + 5$. Hence,

$$|vertices(\Gamma_v)| + |vertices(\Gamma_u)| \leq \left\lfloor \frac{2m + 2 + n'_{hor} + n'_{vert}}{2} \right\rfloor \leq \left\lfloor \frac{3m+7}{2} \right\rfloor = \frac{3m}{2} + 3.$$

Thus, there are at most $\frac{3m}{2} - 1$ interior edges in T of the form pv_i or pu_i and at most $\frac{5m}{2}$ interior edges in total, as desired. □

COROLLARY 2.2. *The polytope P_m described above has the following properties:*

- *It is a simplicial 3-polytope with $m + 4$ vertices.*
- *Its maximal dissection has at least $4m - 6$ tetrahedra.*
- *Its maximal triangulation has at most $\frac{7m}{2} + 1$ tetrahedra.*

In particular, the gap between sizes of the maximal dissection and maximal triangulation is linear on the number of vertices.

Three remarks are in order: First, the size of the maximal triangulation for P_m may depend on the coordinates or, more specifically on which diagonals of Q_m intersect the tetrahedron $v_1v_2u_1u_2$. Second, concerning the size of the minimal triangulation of P_m, we can easily describe a triangulation of P_m with only $m + 5$ tetrahedra: let the vertices n, s, e and w be as defined above (see Figure 2.1) and let us call northeast, northwest, southeast and southwest the edges in the arcs ne, nw, se and sw in the boundary of Q_m. Then, the triangulation consists of the five tetrahedra $v_1v_2u_1u_2$, $v_1v_2u_1w$, $v_1v_2u_2e$, $v_1u_1u_2s$ and $v_2u_1u_2n$ (shown in the left part of Figure 2.5) together with the edges v_2u_2, v_2u_1, v_1u_2 and v_1u_1 joined, respectively, to the northeast, northwest, southeast and southwest edges of Q_m. The right part of Figure 2.5 shows the result of slicing through the triangulation by the plane containing the polygon Q_m.

Finally, although the corollary above states a difference between maximal dissections and maximal triangulations only for P_m with $m > 14$, experimentally we have observed there is a gap already for $m = 8$. Now we discuss two other interesting examples. The following proposition constitutes the proof of Theorem 1.1 (2).

PROPOSITION 2.3.

1. *Consider the following eight points in $\boldsymbol{R}^3$:*
   - *The vertices $s = (0,0,0)$, $e = (1,0,0)$, $w = (0,1,0)$ and $n = (1,1,0)$ of a square in the plane $z = 0$.*
   - *The vertices $v_1 = (-1,0,1)$ and $v_2 = (1,1,1)$ of a horizontal edge above the square, and*
   - *The vertices $u_1 = (0,1,-1)$ and $u_2 = (2,0,-1)$ of a horizontal edge below the square.*

   These eight points are the vertices of a polytope P whose only integer points are precisely its eight vertices and with the following properties:
   - *(a) Its (unique) maximal dissection has 12 tetrahedra. All of them are unimodular, i.e. they have volume 1/6.*
   - *(b) Its (several) maximal triangulations have 11 tetrahedra.*

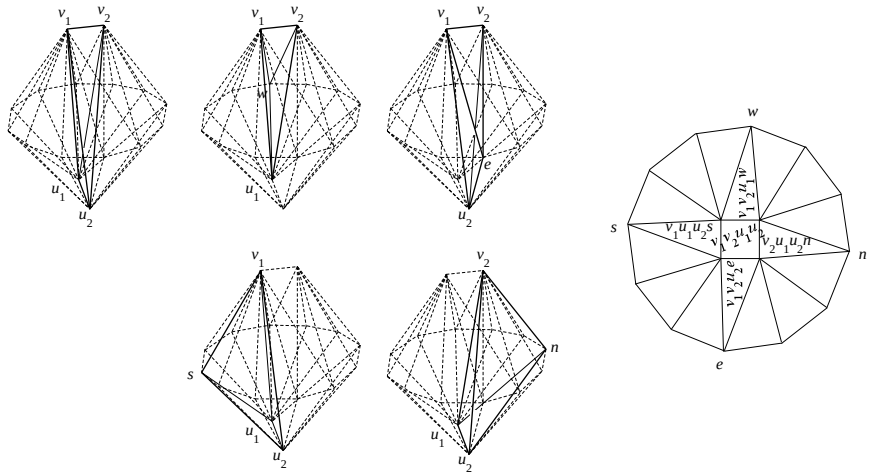

FIG. 2.5. *For the triangulation of P_m with $m+5$ tetrahedra, its five central tetrahedra (left) and the intersection of the triangulation with the polygon Q_m (right) are shown. The four interior vertices are the intersection points of the edges v_1u_1, v_1u_2, v_2u_1 and v_2u_2 with the plane containing Q_m.*

2. *For the 3-polytope with vertices $u_1 = (1,0,0)$, $w = (1,0,1)$, $v_1 = (-1,0,0)$, $s = (-1,0,-1)$, $v_2 = (0,1,1)$, $n = (1,1,1)$, $u_2 = (0,1,-1)$, $e = (-1,1,-1)$, the sizes of its (unique) minimal dissection and (several) minimal triangulations are 6 and 7 respectively, and the sizes of its (several) maximal triangulations and (unique) maximal dissection are 9 and 10 respectively.*

Proof. The polytopes constructed are quite similar to P_4 constructed earlier except that Q_4 is non-regular (in part 2) and the segments u_1u_2 and v_1v_2 are longer and are not orthogonal, thus ending with different polytopes. The polytopes are shown in Figure 2.6. Figure 2.7 describes a maximal dissection of each of them, in five parallel slices. Observe that both polytopes have four vertices in the plane $y = 0$ and another four in the plane $y = 1$. Hence, the first and last slices in parts (a) and (b) of Figure 2.7 completely describe the polytope.

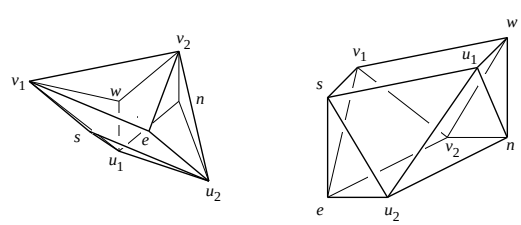

FIG. 2.6. *The two polytopes in Proposition 2.3.*

(1) The vertices in the planes $y = 0$ and $y = 1$ form convex quadrangles whose only integer points are the four vertices. This proves that the eight points are in convex position and that the polytope P contains no integer point other than its vertices. Let us now prove the assertions on maximal dissections and triangulations of P:

(a) Consider the paths of length three $\Gamma_v = \{esnw\}$ and $\Gamma_u = \{sewn\}$, which are monotone respectively in the directions orthogonal to v_1v_2 and u_1u_2. Using them,

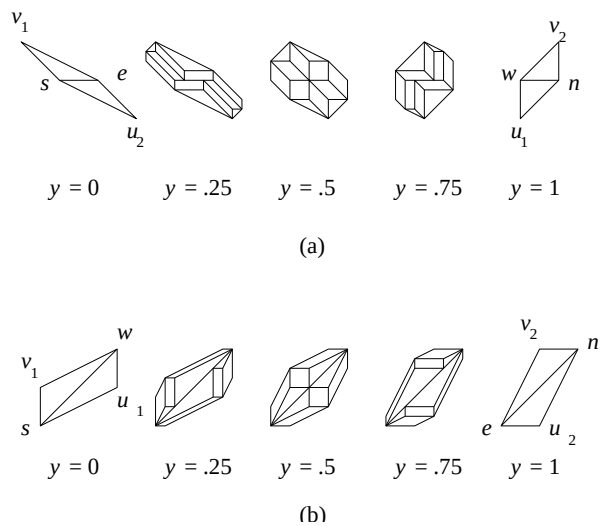

FIG. 2.7. *Five 2-dimensional slices of the maximal dissections of the polytopes in Proposition 2.3. The first and last slices are two facets of the polytopes containing all the vertices.*

we can construct two triangulations of size five of the polytopes $conv(nsewv_1v_2)$ and $conv(nsewu_1u_2)$, respectively. But they do not fill P completely. There is space left for the tetrahedra swv_1u_1 and env_2u_2. This gives a dissection of P with twelve tetrahedra. All the tetrahedra are unimodular, so no bigger dissection is possible.

(b) A triangulation of size 11 can be obtained using the same idea as above, but with paths Γ_v and Γ_u of lengths three and two respectively, which can be taken from the same triangulation of the square $nswe$.

To prove that no triangulation has bigger size, it suffices to show that P does not have any unimodular triangulation. This means all tetrahedra have volume $1/6$. We start by recalling a well-known fact (see Corollary 4.5 in [25]). A lattice tetrahedron has volume $1/6$ if and only if each of its vertices v lies in a *consecutive* lattice plane parallel to the supporting plane of the opposite facet to v. Two parallel planes are said to be consecutive if their equations are $ax+by+cz=d$ and $ax+by+cz=d-1$.

Suppose that T is a unimodular triangulation of P. We will first prove that the triangle u_1u_2e is in T. The triangular facet u_1u_2s of P, lying in the hyperplane $x+2y+2z=0$, has to be joined to a vertex in the plane $x+2y+2z=1$. The two possibilities are e and v_1. With the same argument, if the tetrahedron $u_1u_2sv_1$ is in T, its facet $u_1u_2v_1$, which lies in the hyperplane $2x+4y+3z=1$, will be joined to a vertex in $2x+4y+3z=2$, and the only one is e. This finishes the proof that u_1u_2e is a triangle in T. Now, u_1u_2e is in the plane $x+2y+z=1$ and must be joined to a vertex in $x+2y+z=2$, i.e. to w. Hence u_1u_2ew is in T and, in particular, T uses the edge ew. P is symmetric under the rotation of order two on the axis $\{z=0, x=\frac{1}{2}\}$. Applying this symmetry to the previous arguments we conclude that T uses the edge ns too. But this is impossible since the edges ns and ew cross each other.

(2) This polytope almost fits the description of P_4, except for the fact that the edges v_1u_1, v_2u_2 intersect the boundary and not the interior of the planar quadrangle $nsew$. With the general techniques we have described, it is easy to construct halving dissections of this polytope with sizes from 6 to 10. Combinatorially, the polytope is a 4-antiprism. Hence, Proposition 4.3 shows that its minimal triangulation has 7

tetrahedra. The rest of the assertions in the statement were proved using the integer programming approach proposed in [8], which we describe in Remark 4.5. We have also verified them by enumerating all triangulations [19, 29]. It is interesting to observe that if we perturb the coordinates a little so that the planar quadrilateral $u_1v_1u_2e$ becomes a tetrahedron with the right orientation and without changing the face lattice of the polytope, then the following becomes a triangulation with ten tetrahedra: $\{u_1u_2se,\ u_1u_2ev_1,\ u_1u_2v_1w,\ u_1u_2wn,\ v_1v_2en,\ v_1v_2nw,\ u_1v_1se,\ v_1u_2ew,\ u_2wne,\ v_1wne\}$. □

3. Bounds for the size of a dissection. Let D be a dissection of a d-polytope P. Say two $(d-1)$-simplices S_1 and S_2 of D *intersect improperly* in a $(d-1)$-hyperplane H if both lie in H, are not identical, and they intersect with non-empty relative interior. Consider the following auxiliary graph: take as nodes the $(d-1)$-simplices of a dissection, and say that two $(d-1)$-simplices are adjacent if they intersect improperly in certain hyperplane. A *mismatched region* is the subset of $\boldsymbol{R}^d$ that is the union of $(d-1)$-simplices over a connected component of size larger than one in such a graph. Later, in Proposition 3.4 we will show some of the complications that can occur in higher dimensions.

Define the *simplicial complex of a dissection* as all the simplices of the dissection together with their faces, where only faces that are identical (in $\boldsymbol{R}^d$) are identified. This construction corresponds intuitively to an *inflation* of the dissection where for each mismatched region we move the two groups of $(d-1)$-simplices slightly apart leaving the relative boundary of the mismatched region joined. Clearly, the simplicial complex of a dissection may be not homeomorphic to a ball.

The deformed d-simplices intersect properly, and the mismatched regions become holes. The numbers of vertices and d-simplices do not change.

LEMMA 3.1. *All mismatched regions for a dissection of a convex 3-polytope P are convex polygons with all vertices among the vertices of P. Distinct mismatched regions have disjoint relative interiors.*

Proof. Let Q be a mismatched region and H the plane containing it. Since a mismatched region is a union of overlapping triangles, it is a polygon in H with a connected interior. If two triangles forming the mismatched region have interior points in common, they should be facets of tetrahedra in different sides of H. Otherwise, the two tetrahedra would have interior points in common, contradicting the definition of dissection. Triangles which are facets of tetrahedra in one side of H cover Q. Triangles coming from the other side of H also cover Q.

Now, take triangles coming from one side. As mentioned above, they have no interior points in common. Their vertices are among the vertices of the tetrahedra in the dissection, thus among the vertices of the polytope P. Hence, the vertices of the triangles are in convex position, thus the triangles are forming a triangulation of a convex polygon in H whose vertices are among the vertices of P.

For the second claim, suppose there were distinct mismatched regions having an interior point in common. Then their intersection should be an interior segment for each. Let Q be one of the mismatched regions. It is triangulated in two different ways each coming from the tetrahedra in one side of the hyperplane. The triangles in either triangulation cannot intersect improperly with the interior segment. Thus the two triangulations of Q have an interior diagonal edge in common. This means the triangles in Q consists of more than one connected components of the auxiliary graph, contradicting the definition of mismatched region. □

PROPOSITION 3.2.

1. *The size of a mismatching dissection D of a convex 3-polytope with n vertices is at least $n-2$.*
2. *The size of a dissection of a 3-polytope with n vertices is bounded from above by $\binom{n-2}{2}$.*

Proof. (1) Do an inflation of each mismatched region. This produces as many holes as mismatched regions, say m of them. Each hole is bounded by two triangulations of a polygon. This is guaranteed by the previous lemma. Denote by k_i the number of vertices of the polygon associated to the i-th mismatched region. In each of the holes introduce an auxiliary interior point. The point can be used to triangulate the interior of the holes by *filling in* the holes with the coning of the vertex with the triangles it sees. We now have a triangulated ball.

Denote by $|D|$ the size of the original dissection. The triangulated ball has then $|D| + \sum_{i=1}^{m} 2(k_i - 2)$ tetrahedra in total. The number of interior edges of this triangulation is the number of interior edges in the dissection, denoted by $e_i(D)$, plus the new additions, for each hole of length k_i we added k_i interior edges. In a triangulation T of a 3-ball with n boundary vertices and n' interior vertices, the number of tetrahedra $|T|$ is related to the number of interior edges e_i of T by the formula: $|T| = n + e_i - n' - 3$. The proof is a simple application of Euler's formula for triangulated 2-spheres and 3-balls and we omit the easy details.

Thus, we have the following equation:

$$|D| + \sum_{i=1}^{m} 2(k_i - 2) = n + e_i(D) + \sum_{i=1}^{m} k_i - m - 3.$$

This can be rewritten as $|D| = n + e_i(D) - \sum_{i=1}^{m} k_i + 3m - 3$. Taking into account that $e_i(D) \geq \sum_{i=1}^{m} 2(k_i - 3)$ (because diagonals in a polygon are interior edges of the dissection), we get an inequality

$$|D| \geq n + \sum_{i=1}^{m} k_i - 3m - 3.$$

Finally note that in a mismatching dissection we have $m \geq 1$ and $k_i \geq 4$. This gives the desired lower bound.

(2) Now we look at the proof of the upper bound on dissections. Given a 3-dissection, we add tetrahedra of volume zero to complete to a triangulation with flat simplices that has the same number of vertices. One can also think we are *filling in* the holes created by an inflation with (deformed) tetrahedra.

The lemma states that mismatched regions were of the shape of convex polygons. The 2-simplices forming a mismatched region were divided into two groups (those becoming apart by an inflation). The two groups formed different triangulations of a convex polygon, and they had no interior edges in common. In this situation, we can make a sequence of flips (see [17]) between the two triangulations with the property that any edge once disappeared does not appear again (see Figure 3.1). We add one abstract, volume zero tetrahedron for each flip, and obtain an abstract triangulation of a 3-ball.

The triangulation with flat simplices we created is a triangulated 3-ball with n vertices. By adding a new point in a fourth dimension, and coning from the boundary 2-simplices to the point, we obtain a triangulated 3-sphere containing the original 3-ball in its boundary. From the upper bound theorem for spheres (for an introduction

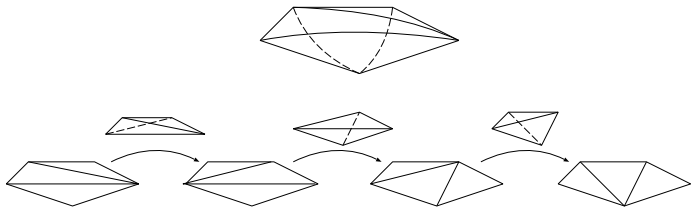

FIG. 3.1. *Filling in holes with tetrahedra according to flips.*

to this topic see [30]) its size is bounded from above by the number of facets of a cyclic 4-polytope minus $2n-4$, the number of 2-simplices in the boundary of D. The 4-dimensional cyclic polytope with $n+1$ vertices is well-known to have $(n+1)(n-2)/2$ facets (see [11, page 63]), which completes the proof after a trivial algebraic calculation. □

OPEN PROBLEM 3.3. *What is the correct upper bound theorem for dissections of d-dimensional polytopes with $d \geq 4$?*

In our proof of Proposition 3.2 we built a triangulated PL-ball from a three-dimensional dissection, using the flip connectivity of triangulations of a convex n-gon. Unfortunately the same cannot be applied in higher dimensions as the flip connectivity of triangulations of d-polytopes is known to be false for convex polytopes in general [22]. But even worse, the easy property we used from Lemma 3.1 that mismatched regions are convex polyhedra fails in dimension $d \geq 4$.

PROPOSITION 3.4. *The mismatched regions of a dissection of a convex 4-polytope can be non-convex polyhedra.*

Proof. The key idea is as follows: suppose we have a 3-dimensional convex polytope P and two triangulations T_1 and T_2 of it with the following properties: removing from P the tetrahedra that T_1 and T_2 have in common, the rest is a non-convex polyhedron P' such that the triangulations T_1' and T_2' of it obtained from T_1 and T_2 do not have any interior 2-simplex in common (actually, something weaker would suffice: that their common interior triangles, if any, do not divide the interior of the polytope).

In these conditions, we can construct the dissection we want as a bipyramid over P, coning T_1 to one of the apices and T_2 to the other one. The bipyramid over the non-convex polyhedron P' will be a mismatched region of the dissection.

For a concrete example, start with Schönhardt's polyhedron whose vertices are labeled $1, 2, 3$ in the lower face and $4, 5, 6$ in the top face. This is a non-convex polyhedron made, for example, by twisting the three vertices on the top of a triangular prism. Add two antipodal points 7 and 8 close to the "top" triangular facets (those not breaking the quadrilaterals see Figure 3.2). For example, take as coordinates for the points $1 = (10, 0, 0)$, $2 = (-6, 8, 0)$, $3 = (-6, -8, 0)$, $4 = (10, -0.1, 10)$, $5 = (-6.1, 8, 10)$, $6 = (-5.9, -8.1, 10)$, $7 = (0, 0, 10.1)$, $8 = (0, 0, -0.1)$.

Let P' be this non-convex polyhedron and let $T_1' = \{1278, 1378, 2378, 1247, 2457, 2357, 3567, 1367, 1467\}$ and $T_2' = \{4578, 4678, 5678, 1248, 2458, 2358, 3568, 1368, 1468\}$. T_1' cones vertex 7 to the rest of the boundary of P', and T_2' vertex 8. Any common interior triangle of T_1' and T_2' would use the edge 78. But the link of 78 in T_1' contains only the points 1, 2 and 3, and the link in T_2' contains only 4, 5 and 6.

Let P be the convex hull of the eight points, and let T_1 and T_2 be obtained from T_1' and T_2' by adding the three tetrahedra 1245, 2356 and 1346. □

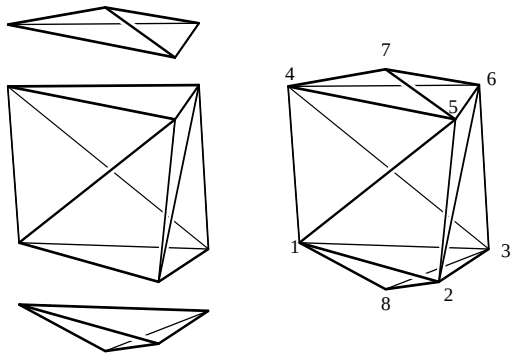

FIG. 3.2. *The mismatched region of a four-dimensional dissection.*

4. Optimal dissections for specific polytopes. The regular cube has been widely studied for its smallest dissections [12, 14]. This receives the name of *simplexity* of the cube. In contrast, because of the type of simplices inside a regular d-cube, a simple volume argument shows that the maximal size of a dissection is $d!$, the same as for triangulations. On the other hand, we know that the size of the maximal triangulation of a *combinatorial* cube can be larger than that: For example, the combinatorial 3-cube obtained as the prism over a trapezoid (vertices on a parabola for instance) has triangulations of size 7. Figure 4.1 shows a triangulation with 7 simplices for those coordinatizations where the edges AB and GH are not coplanar. The tetrahedron $ABGH$ splits the polytope into two non-convex parts, each of which can be triangulated with three simplices. To see this, suppose that our polytope is a very small perturbation of a regular 3-cube. In the regular cube, $ABGH$ becomes a diagonal plane which divides the cube into two triangular prisms $ABCDGH$ and $ABEFGH$. In the non-regular cube, the diagonals AH and BG, respectively, become non-convex. Any pair of triangulations of the two prisms, each using the corresponding diagonal, together with tetrahedron $ABGH$ give a triangulation of the perturbed cube with 7 tetrahedra. The boundary triangulation is shown in the flat diagram. It is worth noticing that for the regular cube the boundary triangulation we showed does not extend to a triangulation of the interior.

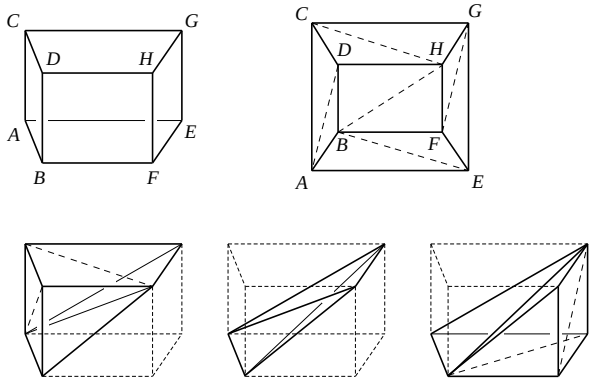

FIG. 4.1. *A triangulation of a combinatorial* 3*-cube into seven tetrahedra.*

One can then ask, what is the general growth for the size of a maximal dissection of a combinatorial cube? To answer this question, at least partially, we use the above construction and we adapt an idea of M. Haiman, originally devised to produce small triangulations of regular cubes [12]. The idea is that from triangulations of a d_1-cube and a d_2-cube of sizes s_1 and s_2 respectively we can get triangulations of the (d_1+d_2)-cube by first subdividing it into $s_1 \times s_2$ copies of the product of two simplices of dimensions d_1 and d_2 and then triangulating each such piece. We recall that any triangulation of the Cartesian product of a d_1-simplex and a d_2-simplex has $\binom{d_1+d_2}{d_1}$ maximal simplices. Hence, in total we have a triangulation of the (d_1+d_2)-cube into $s_1 \times s_2 \times \binom{d_1+d_2}{d_1}$ maximal simplices. Recursively, if one starts with a triangulation of size s of the d-cube, one obtains triangulations for the rd-cube of size $(rd)!(\frac{s}{d!})^r$. In Haiman's context one wants s to be small, but here we want it to be big.

More precisely, denote by $f(d)$ the function $max_{C:\ d\text{-cube}}(max_{T \text{ of } C}|T|)$ and call $g(d) = (f(d)/d!)^{1/d}$. Haiman's argument shows that if $f(d_1) \geq {c_1}^{d_1} d_1!$ and $f(d_2) \geq {c_2}^{d_2} d_2!$ for certain constants c_1 and c_2 then $f(d_1+d_2) \geq {c_1}^{d_1}{c_2}^{d_2}(d_1+d_2)!$. Put differently, that $g(d_1+d_2) \geq \left(g(d_1)^{d_1} g(d_2)^{d_2}\right)^{1/(d_1+d_2)}$. The value on the right hand side is the weighted geometric mean of $g(d_1)$ and $g(d_2)$. In particular, if both $g(d_1)$ and $g(d_2)$ are ≥ 1 and one of them is > 1 then $g(d_1+d_2)$ is > 1 as well.

We have constructed above a triangulation of size 7 for the Klee-Minty 3-cube, which proves $g(3) \geq \sqrt[3]{7/6} = 1.053$. With Haiman's idea we can now construct "large" triangulations of certain 4-cubes and 5-cubes, which prove respectively that $g(4) \geq \sqrt[4]{7/6} = 1.039$ and $g(5) \geq \sqrt[5]{7/6} = 1.031$ (take $d_1 = 3$ and d_2 equal to one and two respectively). Finally, since any $d > 5$ can be expressed as a sum of 3's and 4's, we have $g(d) \geq min\{g(3), g(4)\} \geq 1.039$ for any $d > 5$. Hence:

PROPOSITION 4.1. *For the family of combinatorial d-cubes with $d > 2$ the function $f(d) = max_{C:\ d\text{-cube}}(max_{T \text{ of } C}|T|)$ admits the lower bound $f(d) \geq c^d d!$ where $c \geq 1.031$.*

Exactly as in Haiman's paper, the constant c can be improved (asymptotically) if one starts with larger triangulations for the smaller dimensional cubes. Using computer calculations (see Remark 4.5), we obtained a maximal triangulation for the Klee-Minty 4-cube with 38 maximal simplices, which shows that $g(d) \geq \sqrt[4]{38/24} = 1.122$ for every d divisible by 4 (see [1] for a complete study of this family of cubes). We omit listing the triangulation here but it is available from the authors by request.

OPEN PROBLEM 4.2. *Is the sequence $g(d)$ bounded? In other words, is there an upper bound of type $c^d d!$ for the function $f(d)$? Observe that the same question for* minimal *triangulations of the* regular *d-cube (whether there is a lower bound of type $c^d d!$ for some $c > 0$) is open as well. See [26] for the best lower bound known.*

We continue our discussion with the study of optimal triangulations for three-dimensional prisms and antiprisms. We will call an *m-prism* any 3-polytope with the combinatorial type of the product of a convex m-gon with a line segment. An *m-antiprism* will be any 3-polytope whose faces are two convex m-gons and $2m$ triangles, each m-gon being adjacent to half of the triangles. Vertices of the two m-gons are connected with a band of alternately up and down pointing triangles.

Each such polyhedron has a regular coordinatization in which all the faces are regular polygons, and a realization space which is the set of all possible coordinatizations that yield the same combinatorial information [20]. Our first result is valid in the whole realization space.

PROPOSITION 4.3. *For any three-dimensional m-prism, in any of its possible coordinatizations, the number of tetrahedra in a minimal triangulation is $2m-5+\lceil\frac{m}{2}\rceil$.*

For any three-dimensional m-antiprism, in any of its possible coordinatizations, the number of tetrahedra in a minimal triangulation is $3m - 5$.

Proof. In what follows we use the word *cap* to refer to the m-gon facets appearing in a prism or antiprism. We begin our discussion proving that any triangulation of the prism or antiprism has at least the size we state, and then we will construct triangulations with exactly that size.

We first prove that every triangulation of the m-prism requires at least $2m - 5 + \lceil \frac{m}{2} \rceil$ tetrahedra. We call a tetrahedron of the m-prism *mixed* if it has two vertices on the top cap and two vertices on the bottom cap of the prism, otherwise we say that the tetrahedron is *top-supported* when it has three vertices on the top (respectively *bottom-supported*). For example, Figure 4.2 shows a triangulation of the regular 12-prism, in three slices. Parts (a) and (c) represent, respectively, the bottom and top caps. Part (b) is the intersection of the prism with the parallel plane at equal distance to both caps. In this intermediate slice, bottom or top supported tetrahedra appear as triangles, while mixed tetrahedra appear as quadrilaterals.

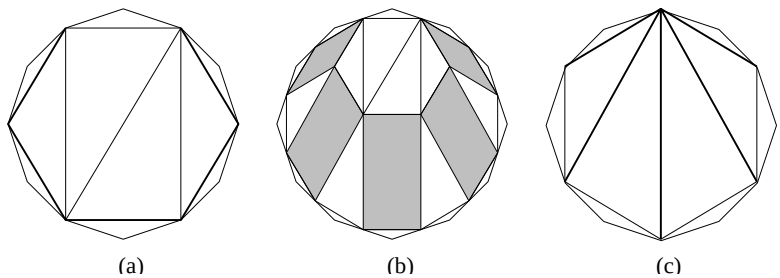

FIG. 4.2. *A minimal triangulation of the regular 12-prism.*

Because all triangulations of an m-gon have $m - 2$ triangles there are always exactly $2m - 4$ tetrahedra that are bottom or top supported. In the rest, we show there are at least $\lceil \frac{m}{2} \rceil - 1$ mixed tetrahedra. Each mixed tetrahedra *marks* an edge of the top, namely the edge it uses from the top cap. Of course, several mixed tetrahedra could mark the same top edge. Group together top-supported tetrahedra that have the same bottom vertex. This grouping breaks the triangulated top m-gon into polygonal regions. Note that every edge between two of these regions must be marked. For example, in part (c) of Figure 4.2 the top cap is divided into 6 regions by 5 marked edges (the thick edges in the Figure). Let r equal the number of regions under the equivalence relation we set. There are $r - 1$ interior edges separating the r regions, and all of them are marked. Some boundary edges of the top cap may be marked too (none of them is marked in the example of Figure 4.2).

We can estimate the marked edges in another way: There are m edges on the boundary of the top, which appear partitioned among some of the regions (it could be the case some region does not contain any boundary edge of the m-gon). We claim that no more than *two* boundary edges per region will be unmarked ($*$). This follows because a boundary edge is not marked only when the top supported tetrahedron that contains it has the point in the bottom cap that is directly under one of the vertices of the edge. In a region, at most two boundary edges can satisfy this. Hence we get at least $m - 2r$ marked edges on the boundary of the top and at least $(r - 1) + (m - 2r) = m - r - 1$ marked edges in total. Thus the number of mixed tetrahedra is at least the maximum of $r - 1$ and $m - r - 1$. In conclusion, we get that, indeed, the number of mixed tetrahedra is bounded below by $\lceil \frac{m}{2} \rceil - 1$. Note that we only use

the combinatorics and convexity of the prism in our arguments. We will show that minimal triangulations achieve this lower bound, but then, observe that if m is even, in a minimal triangulation we must have $r = m/2$ and no boundary edge can be marked, as is the case in Figure 4.2. If m is odd, then we must have $r \in \{(m-1)/2, (m+1)/2\}$ and at most one boundary edge can be marked.

The proof that any triangulation of an m-antiprism includes at least $3m-5$ tetrahedra is similar. There are $2m-4$ top-supported and bottom-supported tetrahedra in any triangulation and there are $r-1$ marked edges between the regions in the top. The only difference is that, instead of claim $(*)$, one has at most *one* unmarked boundary edge per region. Thus there are at least $m-r$ marked edges in the boundary of the top, and in total at least $(r-1)+(m-r) = m-1$ marked edges in the top. Hence there exist at least $(2m-4)+(m-1) = 3m-5$ tetrahedra in any triangulation.

For an m-antiprism we can easily create a triangulation of size $3m-5$ by choosing any triangulation of the bottom m-gon and then coning a chosen vertex v of the top m-gon to the $m-2$ triangles in that triangulation and to the $2m-3$ triangular facets of the m-antiprism which do not contain v. This construction is exhibited in Figure 4.3. Parts (a) and (c) show the bottom and top caps triangulated (each with its 5 marked edges) and part (b) an intermediate slice with the 5 mixed tetrahedra appearing as quadrilaterals.

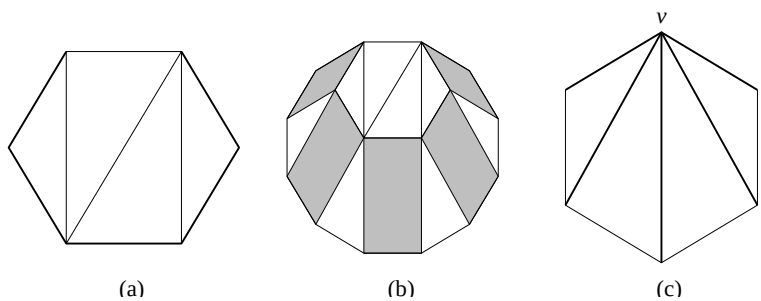

FIG. 4.3. *A minimal triangulation of the regular 6-antiprism.*

For an m-prism, let u_i and v_i, $i = 1, \ldots, m$ denote the top and bottom vertices respectively, so that the vertices of each cap are labeled consecutively and $u_i v_i$ is always an edge of the prism.

If m is even we can chop off the vertices u_i for odd i and v_j for even j, so that the prism is decomposed into m tetrahedra and an $(\frac{m}{2})$-antiprism. The antiprism can be triangulated into $\frac{3m}{2} - 5$ tetrahedra, which gives a triangulation of the prism into $\frac{5m}{2} - 5$ tetrahedra, as desired. Actually, this is how the triangulation of Figure 4.2 can be obtained from that of Figure 4.3.

If m is odd we do the same, except that we chop off only the vertices $u_1, \ldots, u_{m-2}$ and $v_2, \ldots, v_{m-1}$ (no vertex is chopped in the edge $u_m v_m$). This produces $m-1$ tetrahedra and an $(\frac{m+1}{2})$-antiprism. We triangulate the antiprism into $\frac{3m+3}{2} - 5$ tetrahedra and this gives a triangulation of the m-prism into $\frac{5m+1}{2} - 5$ tetrahedra. □

We have seen that the coordinates are not important when calculating minimal triangulations of the three-dimensional prisms and antiprisms. On the other hand, the difference in size of the maximal triangulation can be quite dramatic. Below we prove that in certain coordinatizations it is roughly $\frac{m^2}{2}$ and show experimental data indicating that for the regular prism it is close to $\frac{m^2}{4}$.

PROPOSITION 4.4. *Let A_m be a prism of order m, with all its side edges parallel.*

1. *The size of a maximal triangulation of A_m is bounded as*

$$\left\lceil \frac{m^2+6m-16}{4} \right\rceil \leq max_{T \text{ of } A_m} |T| \leq \frac{m^2+m-6}{2}.$$

2. *The upper bound is achieved if the two caps (m-gon facets) are parallel and there is a direction in which the whole prism projects onto one of its side quadrangular facets. (For a concrete example, let one of the m-gon facets have vertices on a parabola and let A_m be the product of it with a segment).*

Proof. Let the vertices of the prism be labeled $u_1, \ldots, u_m$ and $v_1, \ldots, v_m$ so that the u_i's and the v_j's form the two caps, vertices in each cap are labeled consecutively and $u_i v_i$ is always a side edge.

For the upper bound in part (1), we have to prove that a triangulation of A_m has at most $\frac{m^2+m-6}{2} - 2m + 3 = \frac{m(m-3)}{2}$ interior diagonals. The possible diagonals are the edges $u_i v_j$ where $i - j$ is not in $\{-1, 0, 1\}$ modulo m. This gives exactly twice the number we want. But for any i and j the diagonals $u_i v_j$ and $u_j v_i$ intersect, so only one of them can appear in each triangulation.

We now prove that the upper bound is achieved if A_m is in the conditions of part (2). In fact, the condition on A_m that we will need is that for any $1 \leq i < j \leq k < l \leq m$, the point v_j sees the triangle $v_i u_k u_l$ from the same side as v_k and v_l (i.e. "from above" if we call top cap the one containing the v_i's). With this we can construct a triangulation with $\frac{m^2+m-6}{2} = \binom{m-1}{2} + 2m - 4$ tetrahedra, as follows:

First cone the vertex v_1 to any triangulation of the bottom cap (this gives $m-2$ tetrahedra). The $m-2$ upper boundary facets of this cone are visible from v_2, and we cone them to it (again $m-2$ tetrahedra). The new $m-2$ upper facets are visible from v_3 and we cone them to it ($m-2$ tetrahedra more). Now, one of the upper facets of the triangulation is $v_1 v_2 v_3$, part of the upper cap, but the other $m-3$ are visible from v_4, so we cone them and introduce $m-4$ tetrahedra. Continuing the process, we will introduce $m-4$, $m-5, \ldots, 2, 1$ tetrahedra when coning the vertices $v_5, v_6, \ldots, v_{m-1}, v_m$, which gives a total of $\binom{m-1}{2} + 2m - 4$ tetrahedra, as desired.

The triangulation we have constructed is the *placing triangulation* [17] associated to any ordering of the vertices finishing with $v_1, \ldots, v_m$. A different description of the same triangulation is that it cones the bottom cap to v_1, the top cap to u_m, and its mixed tetrahedra are all the possible $v_i v_{i+1} u_j u_{j+1}$ for $1 \leq i < j \leq m-1$. This gives $\binom{m-1}{2}$ mixed tetrahedra, and $\binom{m-1}{2} + 2m - 4$ tetrahedra in total.

We finally prove the lower bound stated in part (1). Without loss of generality, we can assume that our prism has its two caps parallel (if not, do a projective transformation keeping the side edges parallel). Then, A_m can be divided into two prisms in the conditions of part (2) of sizes k and l with $k + l = m + 2$: take any two side edges of A_m which posses parallel supporting planes and cut A_m along the plane containing both edges. By part (2), we can triangulate the two subprisms with $\binom{k+1}{2} - 3$ and $\binom{l+1}{2} - 3$ tetrahedra respectively, taking care that the two triangulations use the same diagonal in the dividing plane. This gives a triangulation of A_m with $\binom{k+1}{2} + \binom{l+1}{2} - 6 = \frac{k^2+l^2+m-10}{2}$ tetrahedra. This expression achieves its minimum when k and l are as similar as possible, i.e. $k = \lfloor \frac{m}{2} \rfloor + 1$ and $l = \lceil \frac{m}{2} \rceil + 1$. Plugging these values in the expression gives a triangulation of size $\left\lceil \frac{m^2+6m-16}{4} \right\rceil$. □

Based on an integer programming approach we can compute maximal triangulations of specific polytopes (see remark at the end of the article). Our computations with regular prisms up to $m = 12$ show that the size of their maximal triangulations

achieve the lower bound stated in part (1) of Proposition 4.4 (see Table 4.1). In other words, that the procedure of dividing them into two prisms of sizes $\lfloor \frac{m}{2} \rfloor + 1$ and $\lceil \frac{m}{2} \rceil + 1$ in the conditions of part (2) of Proposition 4.4 and triangulating the subprisms independently yields maximal triangulations.

We have also computed maximal sizes of triangulations for the regular m-antiprisms up to $m = 12$, which turn out to follow the formula $\left\lfloor \frac{m^2+8m-16}{4} \right\rfloor$. A construction of a triangulation of this size for every m can be made as follows: Let the vertices of the regular m-antiprism be labeled $u_1, \ldots, u_m$ and $v_1, \ldots, v_m$ so they are forming the vertices of the two caps consecutively in this order and $v_i u_i$ and $u_i v_{i+1}$ are side edges. We let $v_{m+1} = v_1$. The triangulation is made by placing the vertices in any ordering finishing with $v_1, v_2, v_m, v_3, v_{m-1}, \ldots, v_{\lceil \frac{m}{2} \rceil + 1}$. The tetrahedra used are the bottom-supported tetrahedra with apex v_1, top-supported tetrahedra with apex $u_{\lceil \frac{m}{2} \rceil}$ and the mixed tetrahedra $v_i v_{i+1} u_j u_{j+1}$ for $1 \leq i \leq j \leq \lfloor \frac{m}{2} \rfloor$ and $u_i u_{i+1} v_j v_{j+1}$ for $\lfloor \frac{m}{2} \rfloor + 1 \leq i < j \leq m$.

We conjecture that these formulas for regular base prisms and antiprisms actually give the sizes of their maximal triangulations for every m, but we do not have a proof.

m	3	4	5	6	7	8	9	10	11	12
Prism (regular base)	3	6	10	14	19	24	30	36	43	50
Antiprism (regular base)	4	8	12	17	22	28	34	41	48	56

TABLE 4.1

Sizes of maximal triangulations of prisms and antiprisms.

REMARK 4.5. How can one find minimal and maximal triangulations in specific instances? The approach we followed for computing Tables 1.1 and 4.1 and some of the results in Proposition 2.3 is the one proposed in [8], based on the solution of an integer programming problem. We think of the triangulations of a polytope as the vertices of the following high-dimensional polytope: Let A be a d-dimensional polytope with n vertices. Let N be the number of d-simplices in A. We define P_A as the convex hull in $\boldsymbol{R}^N$ of the set of incidence vectors of all triangulations of A. For a triangulation T the *incidence vector* v_T has coordinates $(v_T)_\sigma = 1$ if $\sigma \in T$ and $(v_T)_\sigma = 0$ if $\sigma \notin T$. The polytope P_A is the *universal polytope* defined in general by Billera, Filliman and Sturmfels [3] although it appeared in the case of polygons in [7]. In [8], it was shown that the vertices of P_A are precisely the integral points inside a polyhedron that has a simple description in terms of the oriented matroid of A (see [8] for information on oriented matroids). The concrete integer programming problems were solved using *C-plex Linear Solver*^{TM}. The program to generate the linear constraints is a small C^{++} program written by Samuel Peterson and the first author. Source code, brief instructions, and data files are available via ftp at **http://www.math.ucdavis.edu/~deloera**. An alternative implementation by A. Tajima is also available [27, 28]. He used his program to corroborate some of these results.

It should be mentioned that a simple variation of the ideas in [8] provides enough equations for an integer program whose feasible vertices are precisely the 0/1-vectors of dissections. The incidence vectors of dissections of $conv(A)$, for a point set A, are just the 0/1 solutions to the system of equations $\langle x, v_T \rangle = 1$, where v_T's are the incidence vectors for every regular triangulation T of the Gale transform A^* (regular triangulations in the Gale transform are the same as chambers in A). Generating all these equations is as hard as enumerating all the chambers of A. Nevertheless, it is

enough to use those equations coming from placing triangulations (see [23, Section 3.2]), which gives a total of about n^{d+1} equations if A has n points and dimension d.

Acknowledgments. We are grateful to Alexander Below and Jürgen Richter-Gebert for their help and ideas in the proofs of Proposition 3.2 and 3.4. Alexander Below made Figure 3.2 using the package Cinderella. The authors thank Akira Tajima and Jörg Rambau for corroborating many of the computational results. We thank Samuel Peterson for his help with our calculations. Finally, we thank Hiroshi Imai, Bernd Sturmfels, and Akira Tajima for their support of this project.

REFERENCES

[1] N. Amenta and G.M. Ziegler, *Deformed products and maximal shadows of polytopes*, in: B. Chazelle, J.E. Goodman and R. Pollack, eds., Advances in Discrete and Computational Geometry, Amer. Math. Soc., Providence, Contemporary Mathematics 223 (1999) 57–90.

[2] A. Barvinok and J. Pommersheim, *An algorithmic theory of lattice points in polyhedra*, in: New Perspectives in Algebraic Combinatorics, MSRI book series, No. 38 Cambridge University Press, Cambridge, 1999.

[3] L. Billera, P. Filliman and B. Sturmfels, *Constructions and complexity of secondary polytopes*, Adv. Math. 83 (1990) 155–179.

[4] A. Below, U. Brehm, J.A. De Loera and J. Richter-Gebert, *Minimal simplicial dissections and triangulations of convex 3-polytopes*, Discrete and Comp. Geom. 24 (2000) 1, 35–48.

[5] W. Bruns, J. Gubeladse and N.V Trung *Normal polytopes, triangulations and Koszul algebras* J. Reine Angew. Math. 485 (1997), 123–160.

[6] H.S.M. Coxeter, *Regular Polytopes*, Dover Publications, New York, 1973.

[7] G.B. Dantzig, A.J. Hoffman and T.C. Hu, *Triangulations (tilings) and certain block triangular matrices*, Mathematical Programming 31 (1985) 1–14.

[8] J.A. De Loera, S. Hoşten, F. Santos and B. Sturmfels, *The polytope of all triangulations of a point configuration*, Doc. Math. J. DMV 1 (1996) 103–119.

[9] H. Edelsbrunner, F.P. Preparata and D.B. West, *Tetrahedrizing point sets in three dimensions*, J. Symbolic Comput. 10 (1990) 335–347.

[10] R.T. Firla and G.M. Ziegler, *Hilbert bases, unimodular triangulations, and binary covers of rational polyhedral cones*, Discrete Comput. Geom. 21 (1999) 205–216.

[11] B. Grünbaum *Convex Polytopes* Interscience Publishers Wiley and Sons, London, 1967.

[12] M. Haiman, *A simple and relatively efficient triangulation of the n-cube*, Discrete Comput. Geom. 6 (1991) 287–289.

[13] B. Huber, J. Rambau and F. Santos, *The Cayley trick, lifting subdivisions and the Bohne-Dress theorem on zonotopal tilings*, J. Eur. Math. Soc., 2:2 (2000), 179–198.

[14] R.B. Hughes and M.R. Anderson, *Simplexity of the cube*, Discrete Math. 158 (1996) 99–150.

[15] J.-M. Kantor, *Triangulations of integral polytopes and Ehrhart polynomials*, Beiträge Algebra Geometrie 39 (1998) 205–218.

[16] J. Lagarias and G.M. Ziegler, *Unimodular triangulations*, manuscript, 1999.

[17] C.W. Lee, *Subdivisions and triangulations of polytopes*, in: J.E. Goodman and J. O'Rourke, eds., Handbook of Discrete and Computational Geometry, CRC Press, Boca Raton, 1997, 271–290.

[18] P.S. Mara, *Triangulations for the cube*, J. Combinatorial Theory Ser. A 20 (1976) 170–177.

[19] J. Rambau, *TOPCOM: a program for computing all triangulations of a point set*, ZIB-Berlin, 1999. http://www.zib.de/rambau/TOPCOM.html

[20] J. Richter-Gebert *Realization spaces of polytopes.* Lecture notes in Mathematics, 1643, Springer-Verlag, 1996.

[21] G.L. Rothschild and E.G. Straus, *On triangulations of the convex hull of n points*, Combinatorica 5 (1985) 167–179.

[22] F. Santos, *A point configuration whose space of triangulations is disconnected*, J. of the American Math. Soc., 13: 3 (2000), 611-637.

[23] F. Santos, *Triangulations of oriented matroids*, Memoirs Amer. Math. Soc., to appear. Available at
http://www.matesco.unican.es/~santos/Articulos/index.html

[24] A. Sebö *Hilbert bases, Carathéodory's theorem and combinatorial optimization*, in "Integer programming and combinatorial optimization" (R. Kannan and W. Pulleyblank eds.) Math. Programming society, University of Waterloo Press, Waterloo 1990, 431-456.

[25] A. Sebö *An introduction to empty lattice simplices* Manuscript 2000. Available at http://cosmos.imag.fr/DMD/OPTICOMB/Membres/sebo/sebo.html

[26] W.D. Smith A lower bound for the simplexity of the n-cube via hyperbolic volumes, in "Combinatorics of convex polytopes" (K. Fukuda and G. M. Ziegler, eds.), *European J. Combin.* **21** (2000), no. 1, 131–137.

[27] A. Tajima, *Optimality and integer programming formulations of triangulations in general dimension*, in: K.-Y. Chwa and O.H. Ibarra eds., Proc. of 9th Annual International Symposium on Algorithms and Computation (ISAAC '98), Lecture Notes in Computer Science 1533, Springer-Verlag, Berlin, 377–386.

[28] A. Tajima, *Optimizing geometric triangulations by using integer programming*, Ph.D. Thesis, Univ. of Tokyo, Tokyo, 2000. Available at http://www-imai.is.s.u-tokyo.ac.jp/~akira/papers/dissertation.pdf

[29] F. Takeuchi and H. Imai, *Enumerating triangulations for products of two simplices and for arbitrary configurations of points*, in: T. Jiang and D. T. Lee eds., Proc. of 3rd Annual International Conference on Computing and Combinatorics (COCOON '97), Lecture Notes in Computer Science 1276, Springer-Verlag, Berlin, 470–481.

[30] G.M. Ziegler, *Lectures on Polytopes*, Springer-Verlag, New York, 1995.